4L-Q100BSR4

QSFP28 100GBASE Bi-Directional, MM, DDM, 100m

Applications

- Compliant with 100GBASE Ethernet
- Compliant to the 100GbE XLPPI
- Up to 100 Gbps Bit Rate
- Datacenter backbones
- High-speed servers
- SAN, Routers, Hubs, Load Balancer
- High-performance Computing Clusters
- Other optical links

Features

- QSFP28 100G Optical Transceiver
- QSFP28 MSA Compliant SFF-8636
- Up to 70m links on MMF OM3 fiber
- Up to 100m links on MMF OM4 fiber
- Dual wavelength VCSEL bi-directional PAM4 2 × 50-Gb/s 850nm/900 nm
- Digital Diagnostic Monitoring
- RoHS-6 and Lead Free
- Operating temperature: 0°C ~ +70°C

Description

The 4L-Q100BSR4 is a QSFP28 full duplex transceiver module, with LC Duplex connectors for multimode (MMF) 100 Gigabit optical data communications.
This modules are compatible with most switch/router/server brands and designed to operate with multi mode fiber (MMF) OM3/OM4, using the wavelengths 850/900nm from 0 to 100m over OM4 fiber.

General Specifications – Absolute Maximum Ratings

Parameter	Symbol	Min	Typ	Max
Max Link Length	Lmax			70m (OM3 fiber) 100m (OM4 fiber)
Supply Voltage	Vcc	-0.5		4.0
Storage Temperature	T_S	-40		85
Case Operating Temperature	TOP	-5		75
Relative Humidity	RH	15		85
Receiver Damage Threshold, per Lane	PRdmg	3.4		
Bit Rate (all wavengths)	BR			103.1Gb/s
Bit Error Ratio – pre FEC	BER			$5x10^{-5}$

Electrical Specifications

Parameter	Symbol	Min	Typ	Max	Unit	Ref.
Supply Voltage	Vcc	3.135		3.465	V	
Supply Current	Icc			1.5	A	
Module total power	P			3.5	W	1
Transmitter						
Signaling rate per lane			25.78125 ± 100ppm		Gb/s	
Differential pk-pk input voltage tolerance	Vin,pp,diff			900	mV	
Single-ended voltage tolerance	Vin,pp	-0.35		+3.3	V	
Module stress input test			Per Section 83E.3.4.1, IEEE 802.3bm			

Electrical Specifications

Receiver						
Signaling rate per lane		25.78125 ± 100ppm			Gb/s	
Differential data output swing	Vout,pp	100		400	mVpp	2
		300		600		
		400	600	800		
		600		1200		
Eye width		0.57			UI	
Eye height, differential		228			mV	
Vertical eye closure	VEC	5.5			dB	
Transition time (20% to 80%)	tr, tf	12			ps	

Transceiver Block Diagram

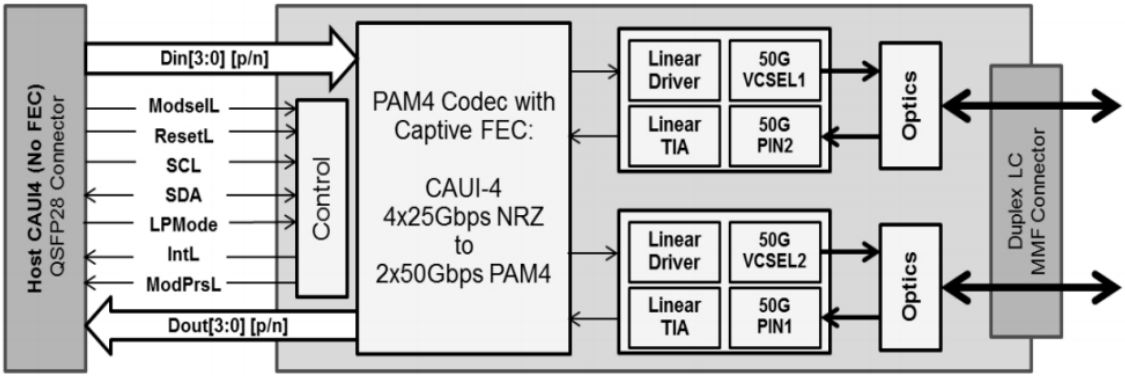

Optical Specifications - Transmitter

Transmitter						
Parameter	Symbol	Min	Typ	Max	Unit	Ref.
Signaling Speed per Lane			25.78125 ± 100ppm		Gb/s	1
Center wavelength CH1		832	850	868	nm	
Center wavelength CH2		882	900	918	nm	
RMS Spectral Width	Pm		0.5	0.65	nm	
Average Launch Power per Lane	Pavg	-6.0		+4.0	dBm	
Launch Power Off Power per Channel	Poff			-30	dBm	
Optical Extiction Ratio	ER	3.0			dB	
Relative Intensity Noise	Rin			-128	dB/Hz	
Optical Return Loss Tolerance				12	dB	

Optical Specifications – Receiver

Transmitter						
Parameter	Symbol	Min	Typ	Max	Unit	Ref.
Signaling Speed per Lane			25.78125 ± 100ppm		Gb/s	1
Center wavelength CH1		882	900	918	nm	
Center wavelength CH2		832	850	868	nm	
Relative Sensitivity Per Channel	R			-8	dBm	
Stressed Receiver Sensitivity				+0.5	dBm	
Receiver Reflectance				-15	dBm	
LOS DE-Assert	LOSD			-10	dBm	
LOS Assert	LOSA	-30			dBm	
LOS Hysteresis	LOSH	0.5			dB	

Electrical Specifications

Parameter	Symbol	Min	Typ.	Max	Unit	Ref.
Supply Voltage	Vcc Vcc Tx Vcc Rx	3.135		3.465	V	
Supply Current	Icc			1.5	mA	
Transmit turn-on time					ms	
Transmitter (per Lane)						
Single ended input voltage tolerance	VinT	0.3		4	V	
Differential data input swing	Vin pp				mVpp	
Differential input threshold					mV	
AC common mode input voltage tolerance (RMS)					mV	
Differential input return loss		Per IEEE P	ba Section	A	dB	
J2 Jitter Tolerance	Jt				UI	
J9 Jitter Tolerance	Jt				UI	
Data Dependent Pulse Width Shrinkage	DDPWS				UI	
Eye mask colordinates {X1, X2 ,Y1,Y2}					UI mV	

Receiver (per Lane)						
Single-ended output voltage	VinT	0.3		4	V	
Differential data output swing	Vout pp				mVpp	

Mechanical Specifications

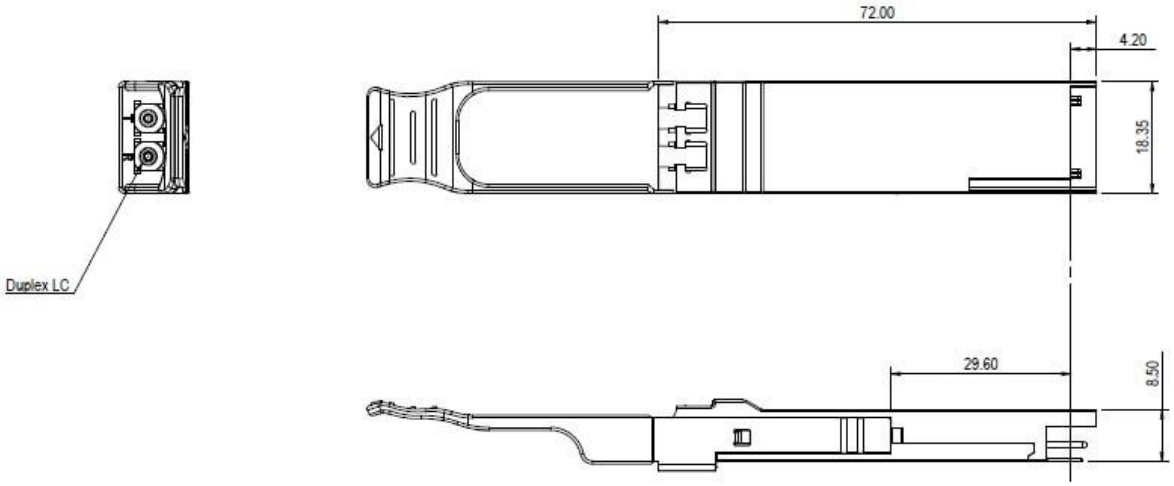

Ordering Information

Part Number	Description
4L-Q100SR4-M100	QSFP28 100GBASE-SR4, 850nm, MM, DDM, MPO/MTP, 100m
4L-Q100BSR4-100	QSFP28 100GBASE-SR4, 850/900nm, BiDi MM, DDM, LC, 150m
4L-Q100CW4-02	QSFP28 100GBASE-CWDM4, LC, DDM, SM 2km.
4L-Q100PLR4-M02	QSFP28 100GBASE-PLR4, 1310nm, SM, DDM, MPO/MTP, 2km
4L-Q100LR4-10	QSFP28 100GBASE-LR4, 1310nm, SM, DDM, Duplex LC, 10Km
4L-Q100LR4-20	QSFP28 100GBASE-LR4, 1310nm, SM, DDM, Duplex LC, 20Km
4L-Q100ER4-40	QSFP28 100GGBASE-ER4, 1310nm, SM, DDM, Duplex LC, 40Km
4L-Q100ZR4-70	QSFP28 100GGBASE-ZR4, 1310nm, SM, DDM, Duplex LC, 70Km
4L-Q100ZR4-80	QSFP28 100GGBASE-ZR4, 1310nm, SM, DDM, Duplex LC, 80Km

Note

This modules have been tested by 4LAN on equipment like Cisco, Juniper, Dell, HP, Mikrotik, Huawei, and other brands. The equipment brand must be informed before shipping the order, so the transceivers are reprogrammed to the corresponding brand.

Contact Information

Website: www.4-lan.com
Email: contato@brazilmkt.com.br
Telephone: +55 11 5521-2522